DC DRIVERS

DUNAMIC STEP - DOWN ECO DRIVER 12-24 CVV (55X12MM)

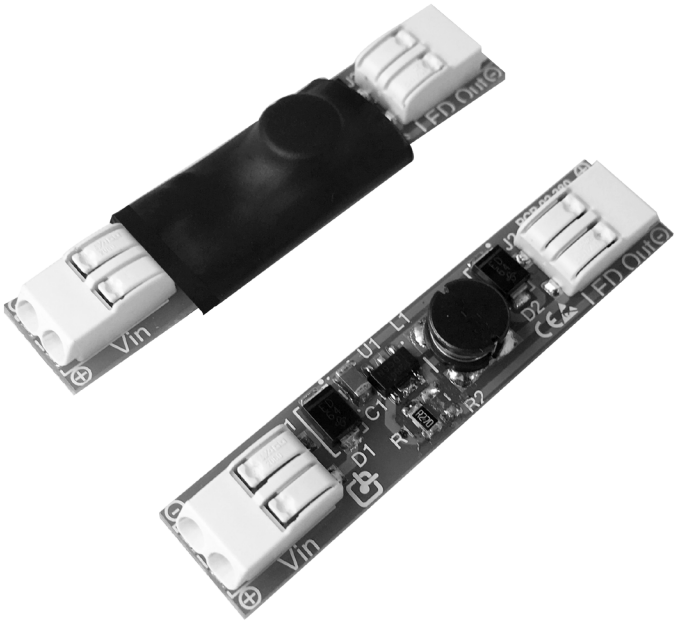

STEP-DOWN ECO 12-24V from DUNAMIC family is a DC/DC step-down driver with constant voltage input 12-24V and constant current output, serves ideally for spotlights or LED modules. Due to its small size and low unit price, the driver is an attractive item that fits in small size fixtures where unit price plays a central role. The driver includes quick Push-In connectors to facilitate IN/OUT connection.
These drivers are the ideal complement to work side by side with MERAKI LED MODULES family in CC.

In comliance with:

EN62384:2007/A1:2010 - EN61547:2013 - EN61347 - 1:2009/A1:2013

APPLICATION

PRODUCT DESCRIPTION

- Driver DC/DC ECO
- Current 200/350/400/500/600/700 mA
- Quick Push-In connectors
- Up to 17W in output
- Compact design
- SELV voltage
- 3 years guarantee
- Ideal for versions in CC

DC DRIVERS

DUNAMIC STEP - DOWN ECO DRIVER

12-24 CVV (55X12MM)

TECHNICAL DATA

- SELV voltage Vin=12-24 V
- Operating Temperature between -5ºC and + 45ºC
- Vout max= 21V
- Weight 5 g
- MOQ: 56 units
- Dimensions: 55x12x7mm
- Open Frame (luminaries class I y II)
- Pout max=17W
- No short circuit protection
- No overload protection
- Max. length STEP/LED L:10m
- For fixtures integration, CE directives compliance

DIMENSIONS

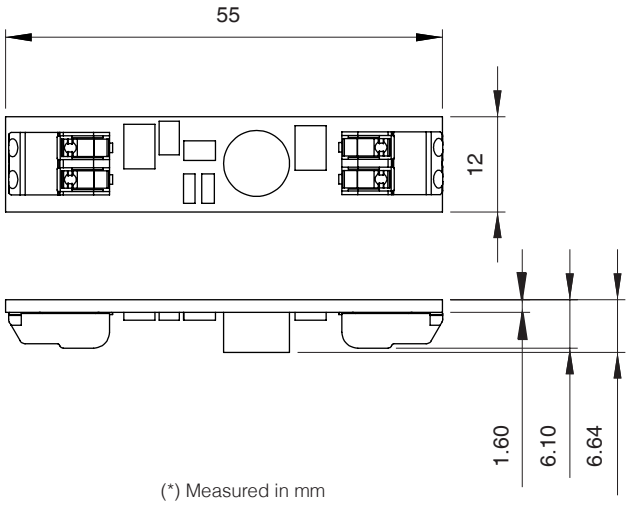

(*) Measured in mm

SPECIFIC TECHNICAL DATA

SPECIFIC TECHNICAL DATA

CODE	RATED CURRENT **mA**	VOLTAGE RANGE **(V)**	NOMINAL VOLTAGE **Vin**	MAX Nº LED	RIPPLE (MAX. LOAD)	OUTPUT VOLTAGE RANGE **Vout**	SWITCHING FRECUENCY **Khz**	EFFICIENCY **(%)**
31.60.016	200	12-24	12	3	0,09	9-21	150-550	84,37
31.60.017	350	12-24	12	3	0,095	9-21	150-550	88,33
31.60.018	400	12-24	12	3	0,12	9-21	150-550	88,038
31.60.019	500	12-24	12	3	0,135	9-21	150-550	86,57
31.60.020	600	12-24	12	3	0,165	9-21	150-550	85,52
31.60.021	700	12-24	12	3	0,14	12-21	150-550	84,05
31.60.016	200	21-24	24	6	0,12	9-21	150-550	86,72
31.60.017	350	21-24	24	6	0,12	9-21	150-550	89,46
31.60.018	400	21-24	24	6	0,135	9-21	150-550	89,77
31.60.019	500	21-24	24	6	0,12	9-21	150-550	90,55
31.60.020	600	21-24	24	6	0,14	9-21	150-550	90,148
31.60.021	700	21-24	24	6	0,16	12-21	150-550	89,852

Note:For silicone heat shrink tubing protection supply, please add the letter "T" behind the product code. Example: 31.60.0012T.
Tolerance range for measurements of 8%.
Vout=Vin-3v.
Values obtained at temperature 30ºC.
If module is connected to a higher power than indicated in output, current will drop drastically and lose stability.

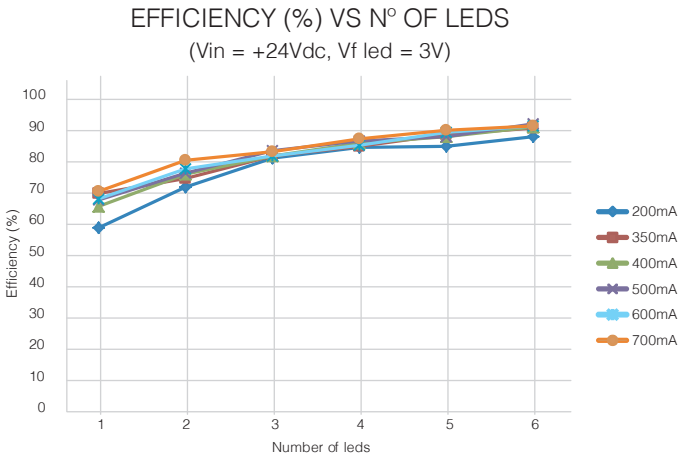

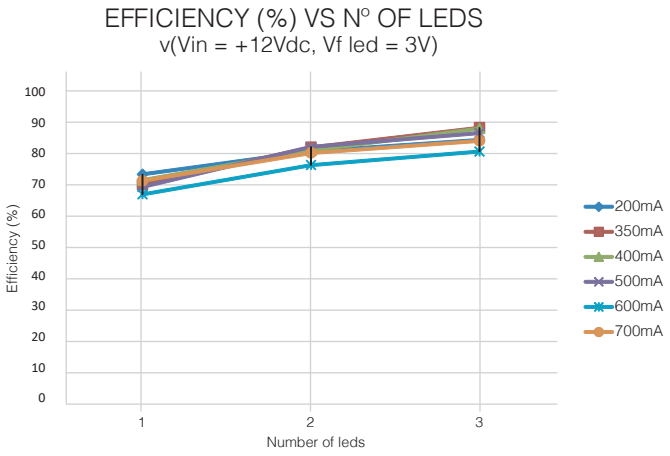

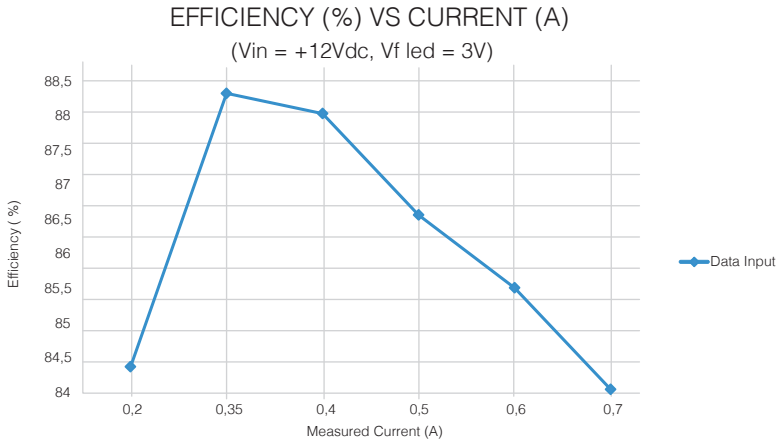

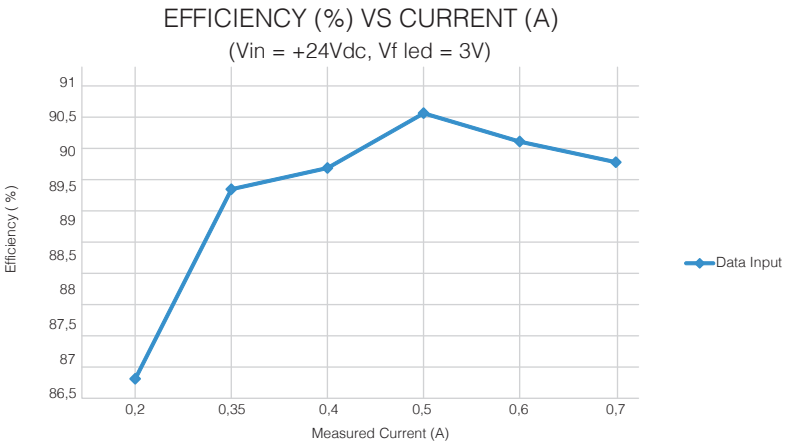

CONNECTION EXAMPLE

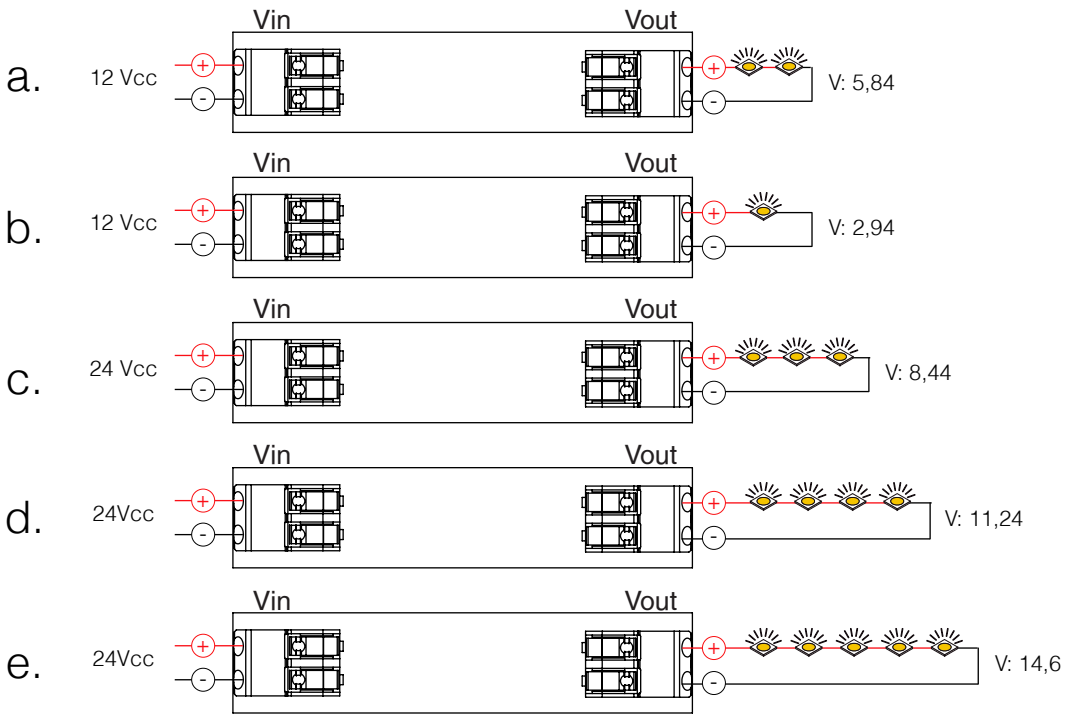

CONNECTION EXAMPLE

1

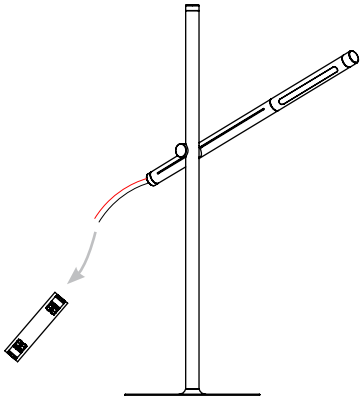

Connect DC/DC to LED.

2

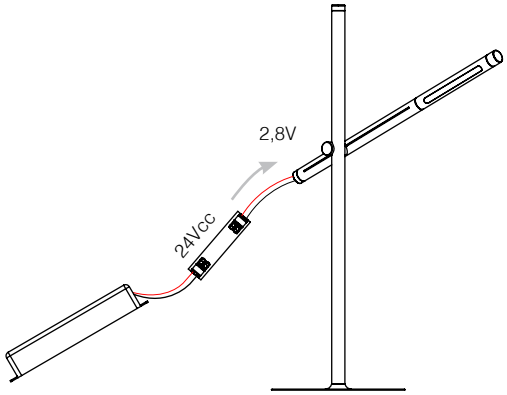

Connect to input voltage.

3

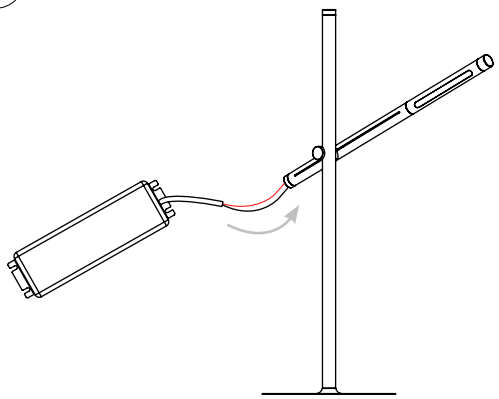

Introduce module in the fixture.

4

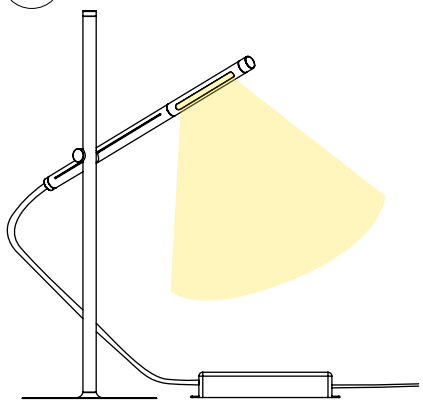

Close the module.

SECURITY AND INSTALLATION INFORMATION

ELECTRICAL POWER

STEP-DOWN ECO 12-24V must be feed at constant current; the energy source power must be in accordance with the quantity of connected modules for proper functioning of the module (or group of modules). Family DUNAMIC LED DRIVERS have polarity, for this reason rated current, nominal power and polarity must be taken into account. If that is not the case, the module might be irreversibly damaged. DUNAMIC LED MODULES require specific driver protection against short-circuit currents, temperature raise and overloads.

ISOLATION

STEP-DOWN ECO 12-24V functions with SELV voltage, does not require active isolation of the component as long as maximum reference SELV voltage is not exceeded and in other case, it will be mandatory earth connection on all conductive components of the fixture or light engine when the number of modules in the series exceeds SELV voltage. The driver must be in compliance with CE, UL or valid analogous regulation.

ESD – STATIC ELECTRICITY INFORMATION

STEP-DOWN ECO 12-24V contains electronic components which are very sensible to static electricity. In this respect is it highly recommendable to always manipulate the items with appropriate ESD protection, and take adequate measures for safety matters. If you need further information please refer to our webpage www.idled.eu.

MOUNTING AND INSTALLATION

I+D LED S.L. is not responsible for the installation of the product. STEP-DOWN ECO 12-24V must be perfectly placed (and/or stick) on the lighting device, profile or base for a proper connection between modules and power source, respecting its nominal values. STEP-DOWN ECO 12-24V modules are designed to be incorporated inside small size light fixtures, as tubes or boxes greater than 56x13x8 mm. Always avoid mechanical stress, compression stress or superficial voltage stress over the electronic components of the PCB. Caution may be taken when placing the PCB inside the lighting fixture or system, as it has an open frame format; or version including silicone heat shrink tubing for protection can be requested.

If any type of chemical substance is used during the assembly of the luminaire or light engine, it must not have any type of curing by means of gas condensation; as these chemical substances may damage the LEDs.

The module is delivered no pre-made holes. Ideal wire for this connection type is multipolar flexible wire of 0,2-0,75mm².

TEMPERATURE

STEP-DOWN ECO 12-24V life-time depends to a great extent on operating temperature. Under no circumstance temperature should exceed the maximum permissible (Tc=80°C) limit here indicated. Exposure to higher temperatures might affect its long term proper functioning. Room temperature must be measured under worst-case conditions to ensure life-time and keep product's guarantee. Store modules between -20 °C and +80 °C, and at a maximum humidity level of 65%.